UE Electronic

Switching Power Adaptor
Wall plug style

Universal 60 Watt - UES60LCP2-SPA Series

IP 42 Class II

Product Features

- Medical & ITE safety approvals
- 2 MOPP input to output isolation
- Leakage current ≤ 100μA
- ≤ 0.15W standby power
- 12V to 24V outputs, up to 60W
- Up to 5,000m operating altitude
- Interchangeable AC plugs

Models & Ratings

Model Number	Voltage(*1) (V)	Current (A)	Rated Power (max)	Ripple & Noise (max)(*2)	Voltage Tolerance	Line & Load Regulation	Efficiency (Average) (*3)	Start Up Delay (@115V&230V)
UES60LCP2-XXXYYYSPA	12.0	0.01-5.00	60.00W	200mVpk-pk	±5%	Line: ±1% Load: ±5%	89.00%	≤3s
	12.1-13.0	0.01-4.60	60.00W	200mVpk-pk	±5%		89.00%	≤3s
	13.1-14.0	0.01-4.28	60.00W	200mVpk-pk	±5%		89.00%	≤3s
	14.1-15.0	0.01-4.00	60.00W	200mVpk-pk	±5%		89.00%	≤3s
	19.0	0.01-3.15	60.00W	200mVpk-pk	±5%		89.00%	≤3s
	19.1-20.0	0.01-3.00	60.00W	200mVpk-pk	±5%		89.00%	≤3s
	20.1-21.0	0.01-2.85	60.00W	200mVpk-pk	±5%		89.00%	≤3s
	21.1-22.0	0.01-2.72	60.00W	200mVpk-pk	±5%		89.00%	≤3s
	22.1-23.0	0.01-2.60	60.00W	200mVpk-pk	±5%		89.00%	≤3s
	23.1-24.0	0.01-2.50	60.00W	200mVpk-pk	±5%		89.00%	≤3s

Mechanical Details

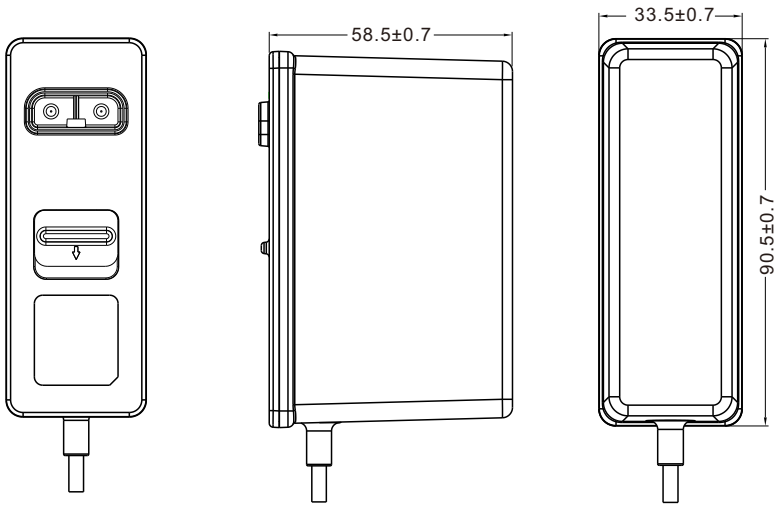

Interchangeable AC Plug Options

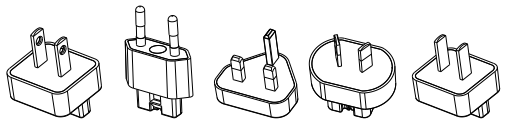

Unit: mm

Input

Input Voltage Range	80-264VAC
Frequency Range	47-63Hz
Input Current	1.7A at 80VAC
Touch Leakage Current (max)	≤100μA at 264VAC

Environmental

Operating Temperature	0℃ to 40℃
Storage Temperature	-5℃ to 60℃
Operating Humidity	10% to 90% RH, non-condensing
Storage Humidity	5% to 90% RH
Operating Altitude	5,000m

Gemeral

Dimensions	90.5(L) 33.5(W) 58.5(H)mm
Weight	220g
MTBF	>100,000hrs Telcordia_SR-332 at 25℃

Protection

Overload	120-200% rated output power, auto recovery
Over Voltage	120-150% rated output voltage input to reset
Short Circuit	Trip and restart (hiccup mode)

Safety Approvals

Safety Agency / Mark	Medical	ITE
CB	IEC60601-1,IEC60601-1-11(ClassII)	IEC62368-1
UL	ANSI/AAMI ES60601-1 CAN/CSA C22.2 NO. 60601-1	UL62368-1
TUV Rheinland/Mark	EN60601-1/EN60601-1-11	-
TUV Rheinland/GS	-	EN62368-1
CCC	-	GB4943.1
CE	-	EN62368
PSE	-	J62368
RCM	-	AS/NZS 62368.1
KC	-	K62368-1
FCC	-	FCC PART 15

EMC

Emissons	Medical	ITE
Conducted	IEC/EN 60601-1-2,CISPR 11	EN55032, CISPR32
Radiated	IEC/EN 60601-1-2,CISPR 11	EN55032, CISPR32
Harmonic Currents	EN61000-3-2, Class A	EN61000-3-2, Class A
Voltage Flicker	EN61000-3-3	EN61000-3-3
Immunity	**IEC/EN 60601-1-2**	**EN55024, CISPR 24**

ESD	EN61000-4-2	±15kV air, ±8kV contact
Radiated Immunity	EN61000-4-3	10V/m, 3V/m 80MHz - 2700MHz
EFT/Burst	EN61000-4-4	±2kV on AC port, ±1kV on signal ports
Surge (*6)	EN61000-4-5	±1KV line to line (DM)
Conducted Immunity	EN61000-4-6	3Vrms, 6Vrms (0.15MHz-80MHz)
Magnetic Field	EN61000-4-8	30 A/m
Dips & Interruptions	EN61000-4-11	0%, 70%, 0% of UT

Others

Dielectric Withstand Voltage	4000VAC input to output
Insulation Resistance	10M Ohms, 500VDC input to output