J-518

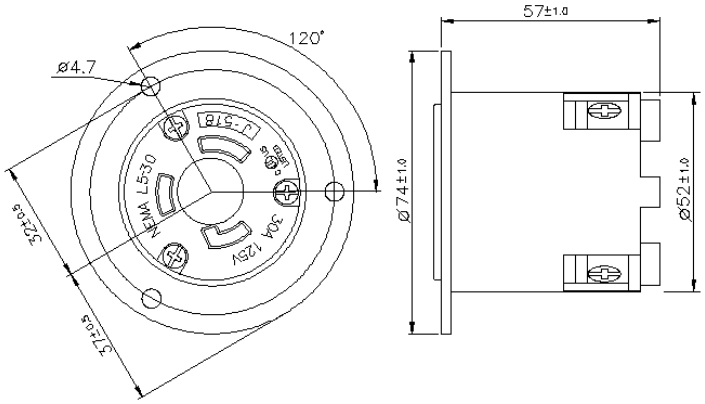

Product Specifications	
Product Item	Flanged Outlet
Electrical Rating	2 Pole, 3 Wire Grounding 30A 125V AC
Configuration	NEMA L5-30
Housing Material	Nylon - Natural
Contact Holder Material	Gray Polycarbonate
Retainer Material	Clear Polycarbonate
Contact Material	Copper Alloy
Terminal Screw Material	Brass
Ground Screw Material	Brass (Green)
Flammability	UL 94 V-2
Operating Temperatures	Maximum Continuous 65 ℃, Minimum -20 ℃ (w/o impact)
Standards and Certifications	UL/cUL Listed to UL498 File E237606
RoHS Compliant	Yes

OLYMPIA